Visual Interpretation Of The

INTERNATIONAL RESIDENTIAL CODE

2006 STAIR BUILDING CODE

Portions of this document reproduce sections from the
2006 International Residential Code, International Code Council, Falls Church, Virginia.
Reproduced with permission. All rights reserved.

The Stairway Manufacturers Association publishes visual interpretations of Building Codes to be accurate pictorial descriptive material void of editorial comment to aid in the understanding of the written text. We provide this document as a learning tool to aid designers, builders, homeowners, building officials, stair builders, and others in the shelter industry to accurately and consistently interpret the building code related to stairways.

The SMA has participated in the model code development process since 1988. We support the International Code Council's development process through our membership and are recognized and respected for our responsible efforts at code reform and interpretation in addition to our trade and industry experience that we bring to the table. This experience and reputation is an asset to our continued efforts to provide safe stairways and reduce stairway accidents while allowing freedom of design, and aesthetic properties of preference.

In addition to our experience in the code development process we use the commentaries published by the International Code Council as a resource for each visual interpretation.

The SMA wishes to thank the ICC for their permission to print portions of the IRC and in full recognition of our responsibility to educate and inform we invite your feedback and comments.

This document is provided electronically at no cost to those who wish to print it in whole from www.stairways.org. It is not to be copied or used in part or in any other publication. Printed copies are available to SMA members for the cost of shipping.

If you find this document to be of significant value, then you will find it equally beneficial to associate with a member of the Stairway Manufacturer's Association (SMA). The members of the SMA have taken on the task of influencing the development of responsible and functional building codes. They are the very individuals effectively communicating consistent interpretation of each stair code. A resulting product of their effort is this Visual Interpretation. SMA members know their craft of Stair Design and Construction and they know Building Codes. You are encouraged to contact a member of the SMA before you begin your next stairway project.

STAIRWAY MANUFACTURERS' ASSOCIATION SMA

The Stair Industry
Dedicated to Safety & Quality

If your work is related to stairs and you can prescribe to the ethics and quality standards of the SMA you may qualify for membership. To learn more about the SMA go to www.stairways.org, or contact us at sma@stairways.org.

SECTION R311.5 STAIRWAYS

R311.5.1 Width.
Stairways shall not be less than 36 inches (914 mm) in clear width at all points above the permitted handrail height and below the required headroom height. **PHOTO 1**. Handrails shall not project more than 4.5 inches (114 mm) on either side of the stairway **PHOTO 2** and the minimum clear width of the stairway at and below the handrail height, including treads and landings, shall not be less than 31.5 inches (787 mm) where a handrail is installed on one side and 27 inches (698 mm) where handrails are provided on both sides **PHOTO 3**.

Exception: The width of spiral stairways shall be in accordance with Section R311.5.8.
See **PHOTO 35** on page 12.

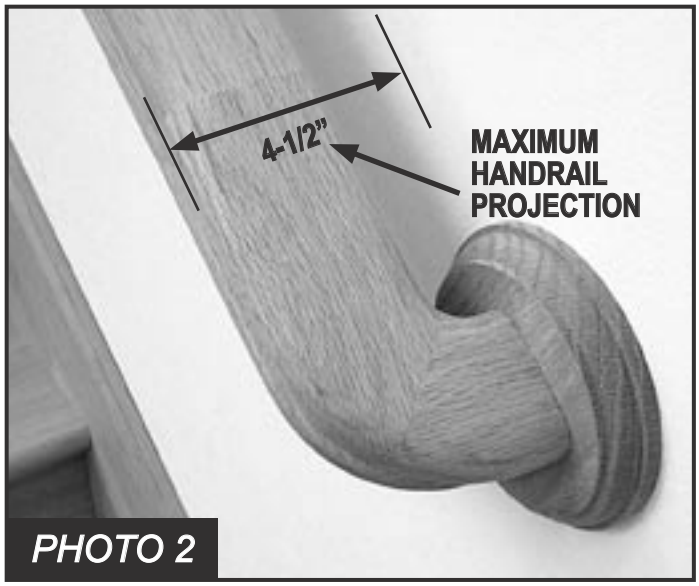

PHOTO 2

PHOTO 1

PHOTO 3

R311.5.2 Headroom.
The minimum headroom in all parts of the stairway shall not be less than 6 feet, 8 inches (2036 mm) measured vertically from the sloped plane adjoining the tread nosing **PHOTO 4** or from the floor surface of the landing or platform. **PHOTO 5**.

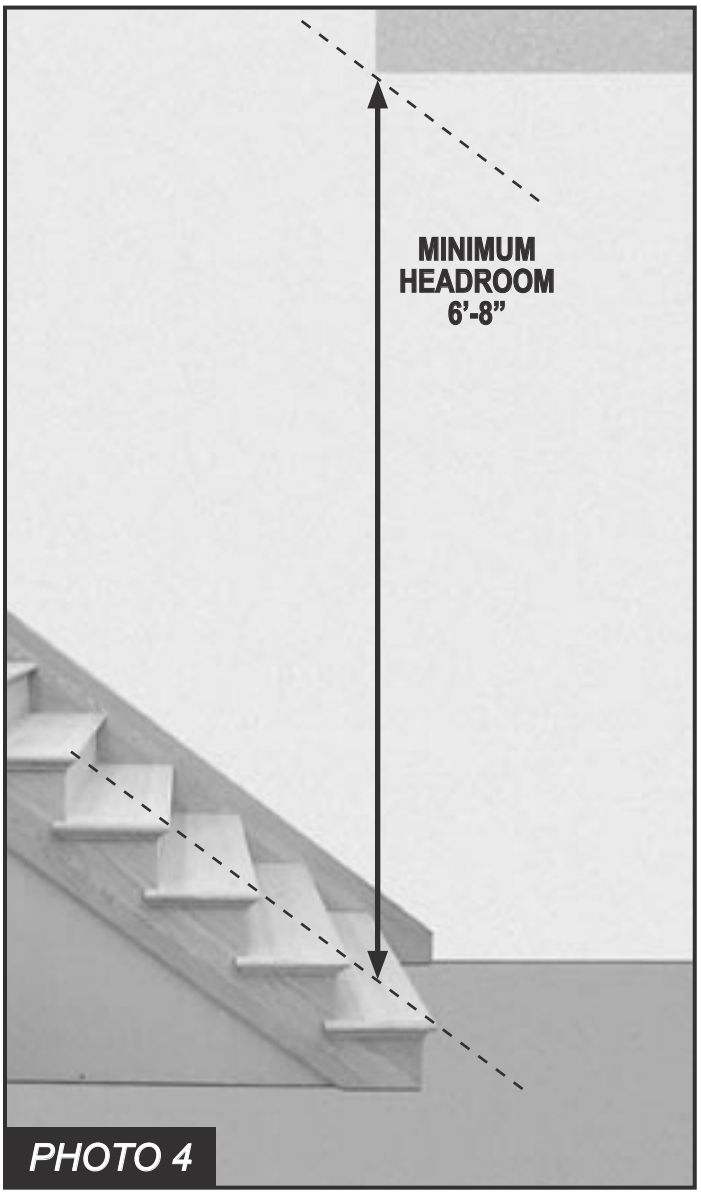

PHOTO 4

PHOTO 5

R311.5.3 Stair treads and risers.

R311.5.3.1 Riser height.
The maximum riser height shall be 7¾ inches (196 mm). The riser shall be measured vertically between leading edges of the adjacent treads. **PHOTO 6**. The greatest riser height within any flight of stairs shall not exceed the smallest by more than ⅜ inch (9.5 mm). **PHOTO 7**.

R311.5.3.2 Tread depth.
The minimum tread depth shall be 10 inches (254 mm). The tread depth shall be measured horizontally between the vertical planes of the foremost projection of adjacent treads and at a right angle to the tread's leading edge. **PHOTO 8**. The greatest tread depth within any flight of stairs shall not exceed the smallest by more than ⅜ inch (9.5 mm). **PHOTO 9**.

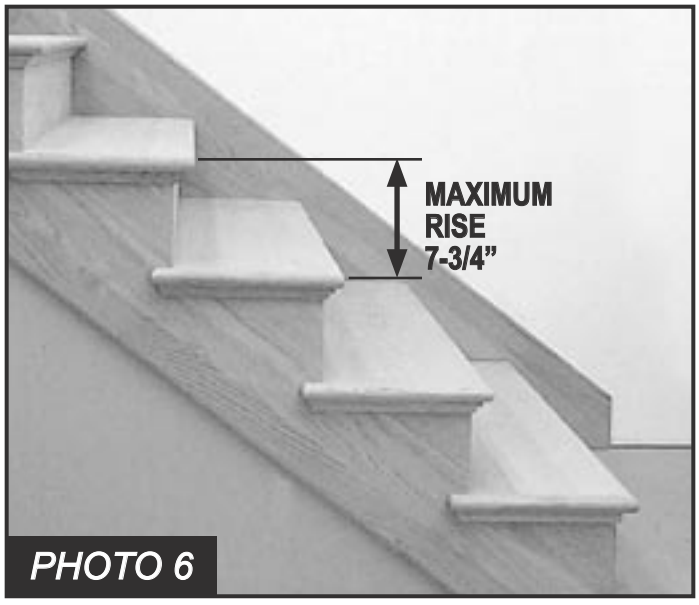

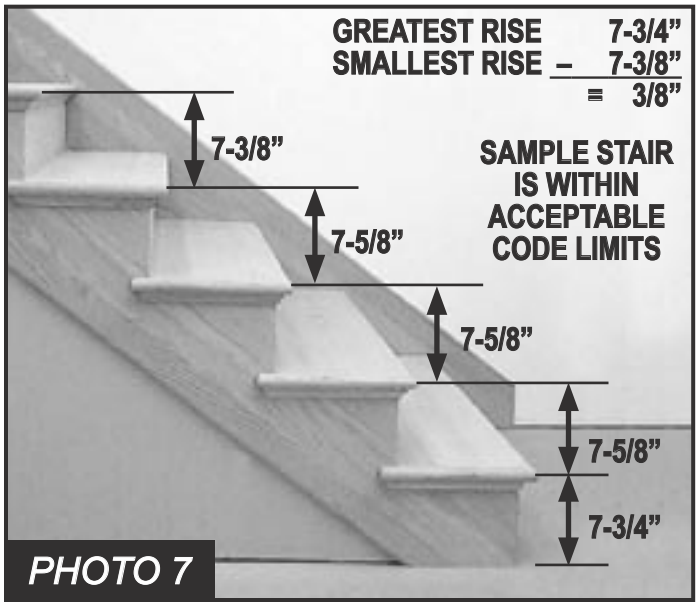

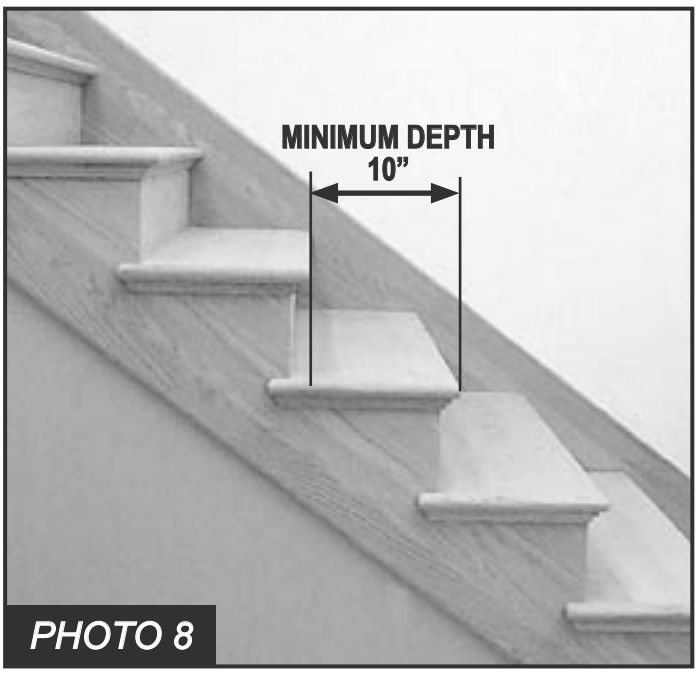

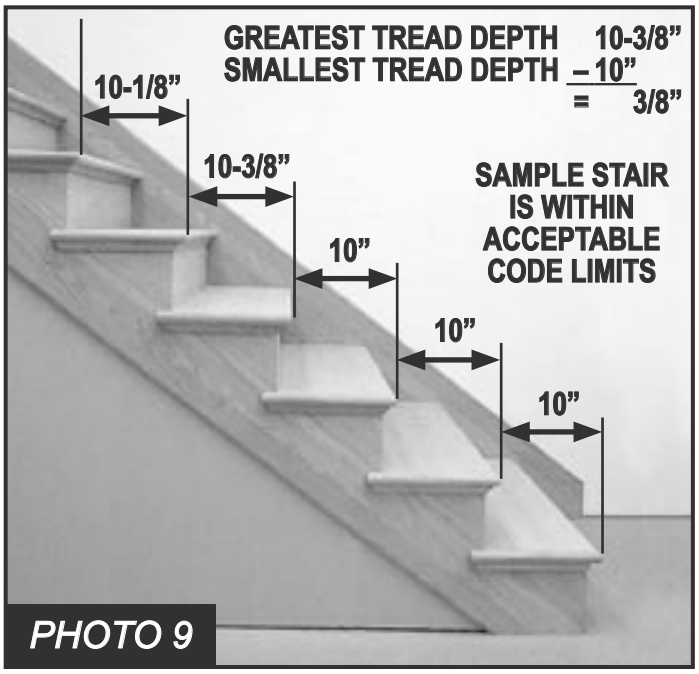

Winder treads shall have a minimum tread depth of 10 inches (254 mm) measured as above at a point 12 inches (305 mm) from the side where the treads are narrower. **DRAWING 10**. Winder treads shall have a minimum tread depth of 6 inches (152 mm) at any point. **DRAWING 11**. Within any flight of stairs, the greatest winder tread depth at the 12 inch (305 mm) walk line shall not exceed the smallest by more than ⅜ inches (9.5 mm).

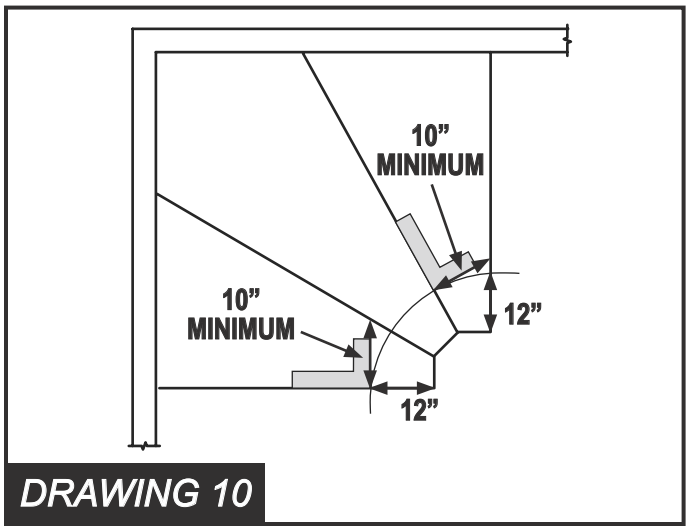

DRAWING 10

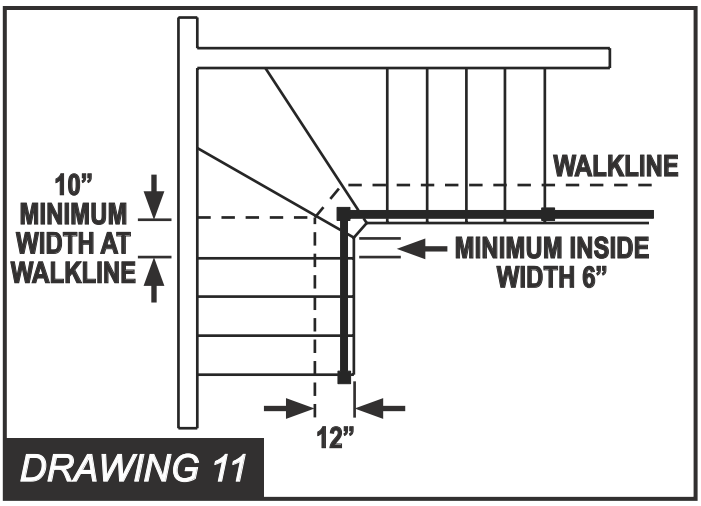

DRAWING 11

WINDER - A tread with non-parallel edges (as defined in Chapter 2 - IRC, IBC).

ALTERNATE WINDER TREAD DESIGNS

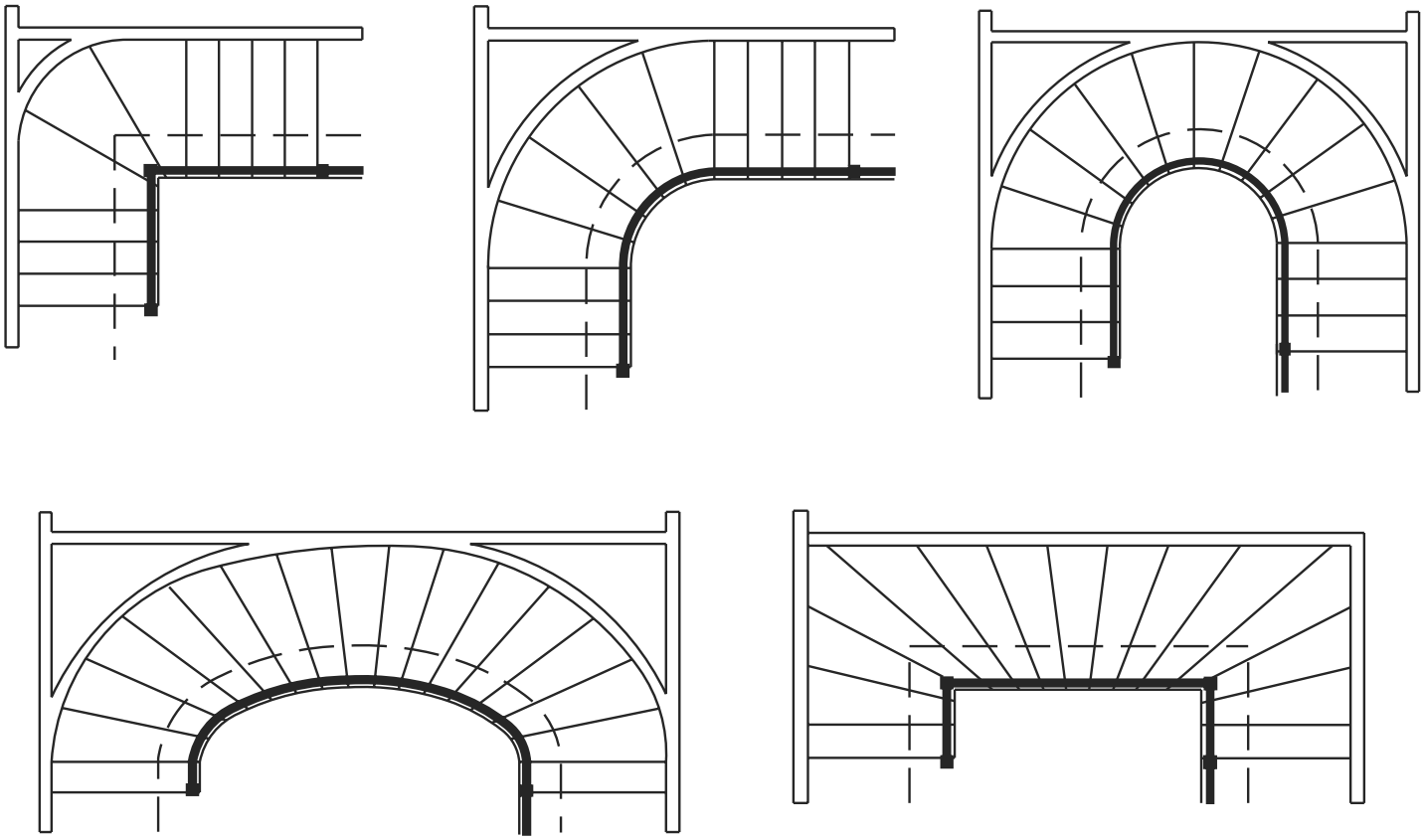

R311.5.3.3 Profile.
The radius of curvature at the leading edge of the tread shall be no greater than 9/16 inch (14.3 mm). **PHOTO 12**. A nosing not less than ¾ inch (19 mm) but not more than 1¼ inches (32 mm) shall be provided on stairways with solid risers. **PHOTO 13**. The greatest nosing projection shall not exceed the smallest nosing projection by more than ⅜ inch (9.5 mm) between two stories, including the nosing at the level of floors and landings. **PHOTO 14**. Beveling of nosing shall not exceed ½ inch (12.7 mm). **PHOTO 15**. Risers shall be vertical or sloped from the underside of the leading edge of the tread above at an angle not more than 30 (0.51 rad) degrees from the vertical. **PHOTO 16**. Open risers are permitted, provided that the opening between treads does not permit the passage of a 4-inch diameter (102 mm) sphere. **PHOTO 17**.

Exceptions: 1. A nosing is not required where the tread depth is a minimum of 11 inches (279 mm).

2. The opening between adjacent treads is not limited on stairs with a total rise of 30 inches (762 mm) or less. **PHOTO 17**.

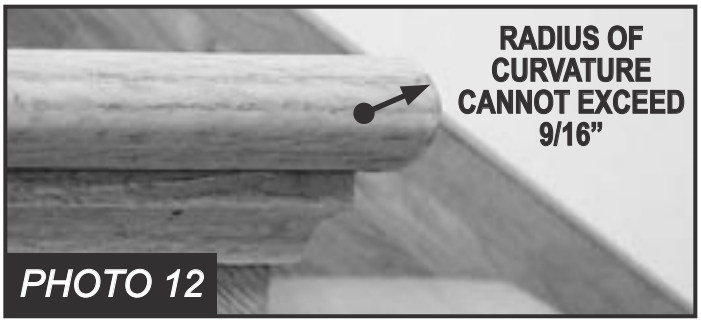

PHOTO 12

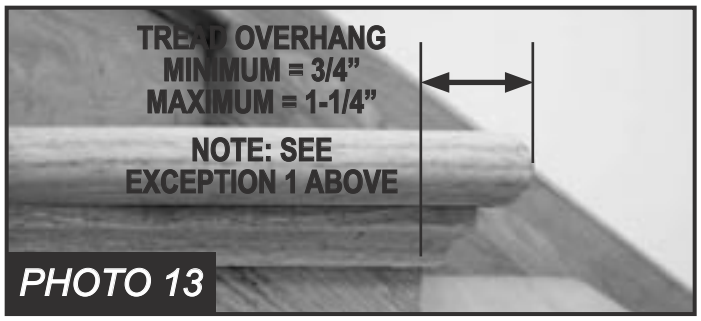

PHOTO 13

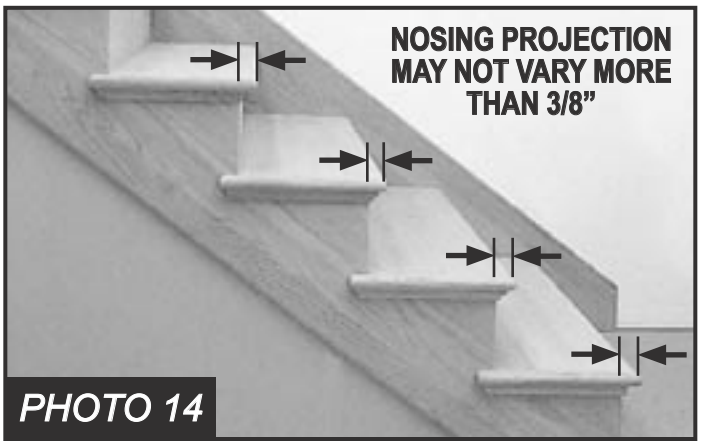

PHOTO 14

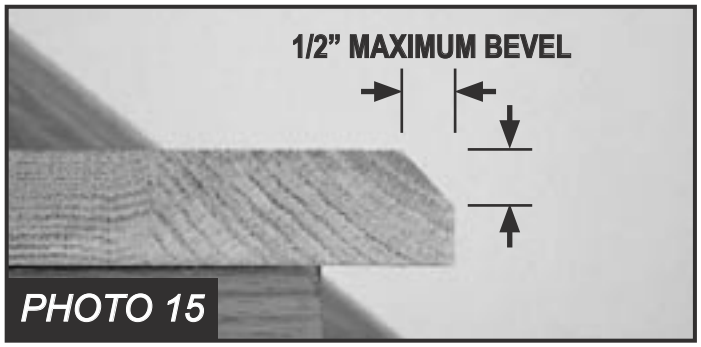

PHOTO 15

PHOTO 16

PHOTO 17

R311.5.4 Landings for Stairways.
There shall be a floor or landing at the top and bottom of each stairway.

Exception: A floor or landing is not required at the top of an interior flight of stairs, including stairs in an enclosed garage, provided a door does not swing over the stairs.

A flight of stairs shall not have a vertical rise greater than 12 feet (3658 mm) between floor levels or landings.
The width of each landing shall not be less than the stairway served. Every landing shall have a minimum dimension of 36 inches (914 mm) measured in the direction of travel. **DRAWING 18.**

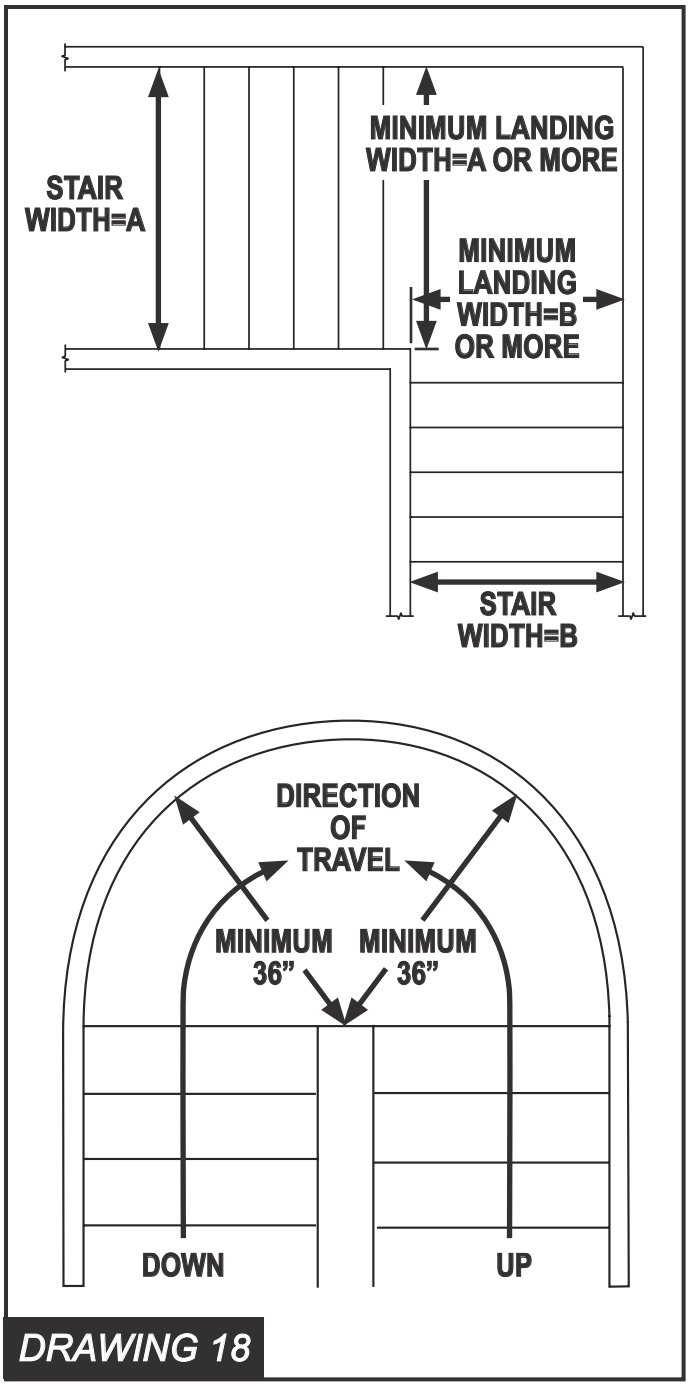

DRAWING 18

R311.5.5 Stairway walking surface.
The walking surface of treads and landings of stairways shall be sloped no steeper than one unit vertical in 48 inches horizontal (2-percent slope). **PHOTO 19**.

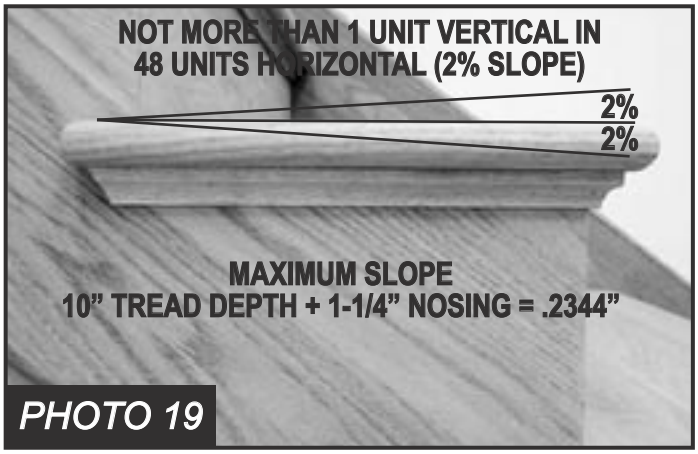

PHOTO 19

R311.5.6 Handrails.
Handrails shall be provided on at least one side of each continuous run of treads or flight with four or more risers. **DRAWING 20**.

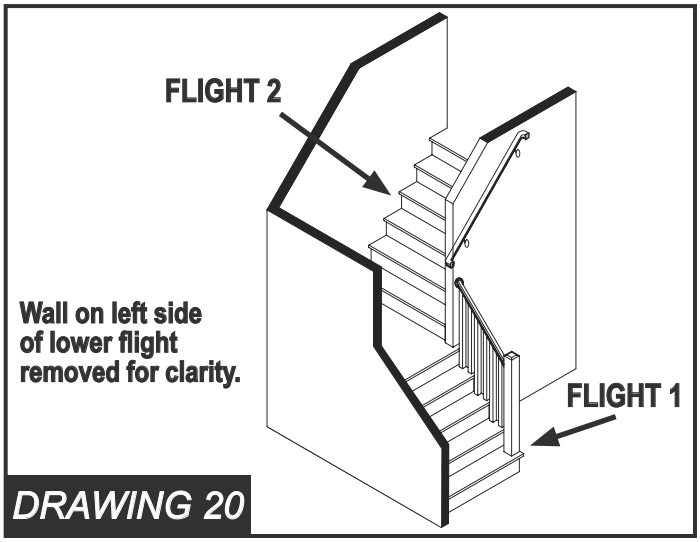

DRAWING 20

R311.5.6.1 Height. Handrail height, measured vertically from the sloped plane adjoining the tread nosing, or finish surface of ramp slope, shall be not less than 34 inches (864 mm) and not more than 38 inches (965 mm). **PHOTO 21**.

PHOTO 21

R311.5.6.2 Continuity.
Handrails for stairways shall be continuous for the full length of the flight, from a point directly above the top riser of the flight to a point directly above lowest riser of the flight. **DRAWING 22 and PHOTO 23**. Handrail ends shall be returned **PHOTO 24** or shall terminate in newel posts or safety terminals. Handrails adjacent to a wall shall have a space of not less than 1½ inches (38 mm) between the wall and the handrails. **PHOTO 25**.

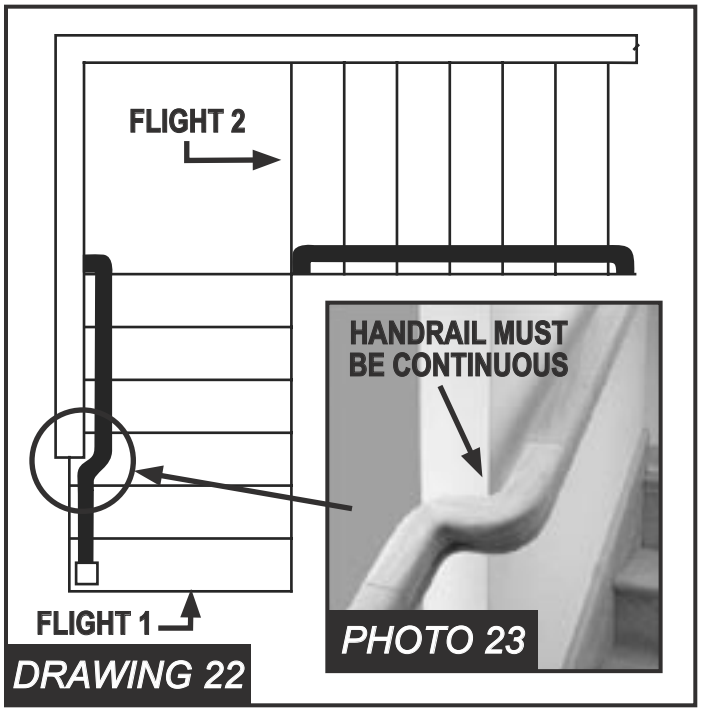

Exceptions: 1. Handrails shall be permitted to be interrupted by a newel post at the turn. **PHOTO 26**.

2. The use of a volute, turnout, starting easing or starting newel shall be allowed over the lowest tread. **PHOTO 27**.

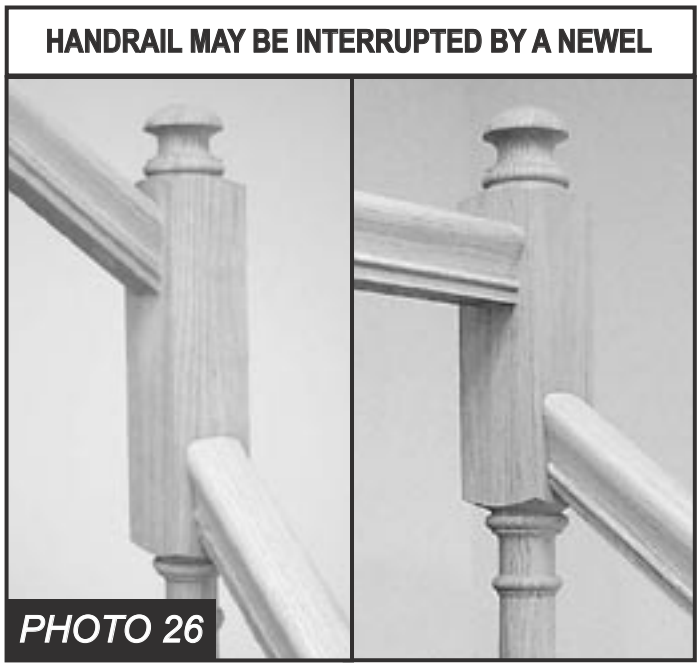

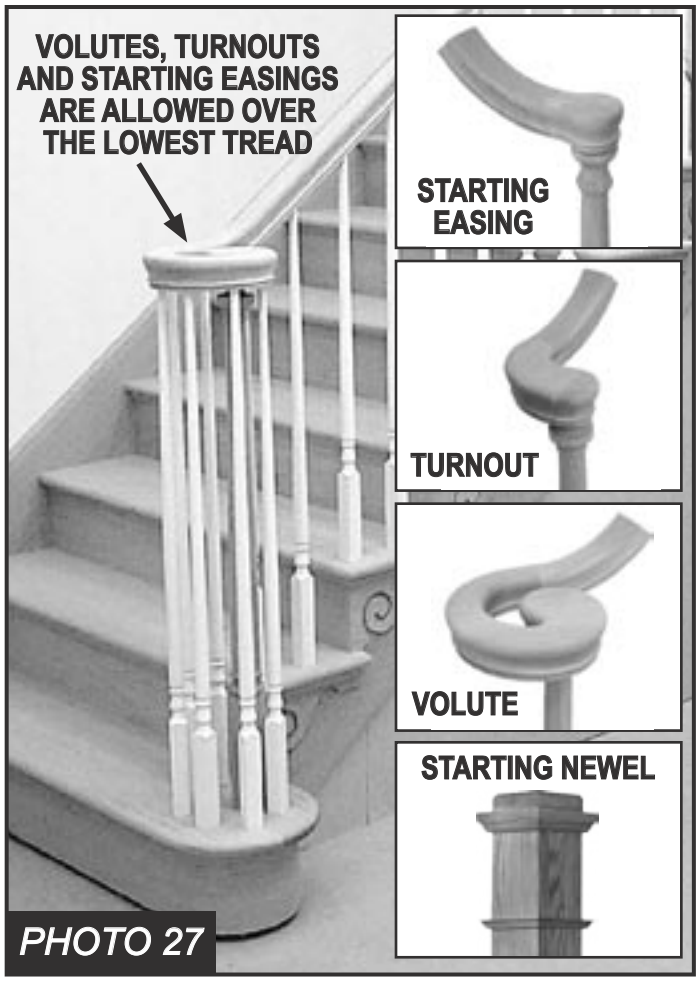

R311.5.6.3 Handrail grip size.
All required handrails shall be of one of the following types or provide equivalent graspability. **DRAWING 28**.

Profiles other than Type I and Type II may be determined to provide equivalent graspability.

DRAWING 28

1. Type I. Handrails with a circular cross section shall have an outside diameter of at least 1¼ inches (32 mm) and not greater than 2 inches (51 mm). **PHOTO 29**. If the handrail is not circular it shall have a perimeter dimension of at least 4 inches (102 mm) and not greater than 6¼ inches (160 mm) with a maximum cross section of dimension of 2¼ inches (57 mm). **PHOTO 30**.

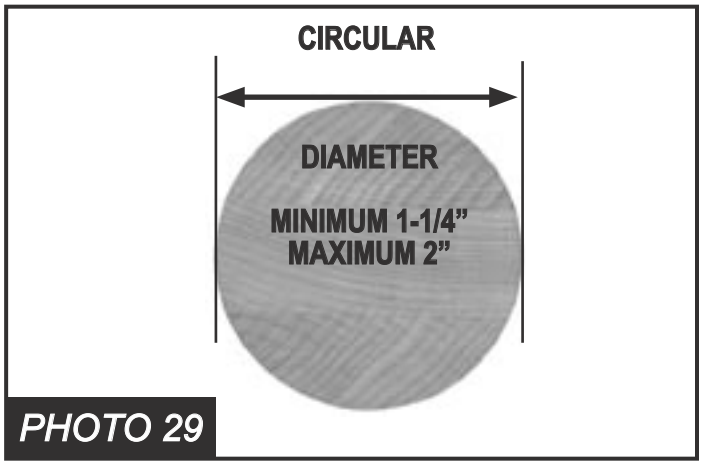

PHOTO 29

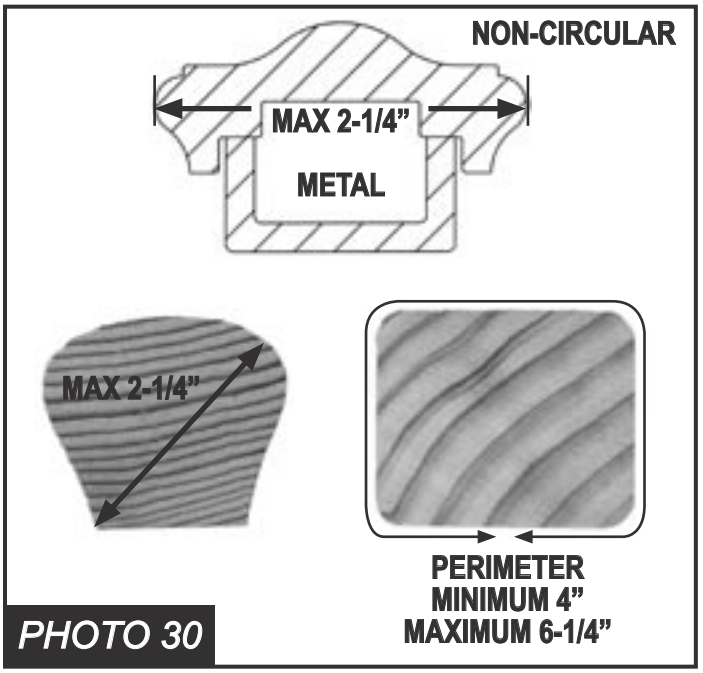

PHOTO 30

2. Type II. Handrails with a perimeter greater than 6¼ inches (160mm) shall provide a graspable finger recess area on both sides of the profile. **PHOTO 31**. The finger recess shall begin within a distance of ¾ inch (19 mm) measured vertically from the tallest portion of the profile and achieve a depth of at least 5/16 inch (8mm) within ⅞ inch (22mm) below the widest portion of the profile. **PHOTO 32**. This required depth shall continue for at least ⅜ inch (10mm) to a level that is not less than 1¾ inches (45 mm) below the tallest portion of the profile. **PHOTO 33**. The minimum width of the handrail above the recess shall be 1¼ inches (32 mm) to a maximum of 2¾ inches (70 mm). **PHOTO 34**. Edges shall have a minimum radius of 0.01 inches (0.25 mm). **PHOTO 34**.

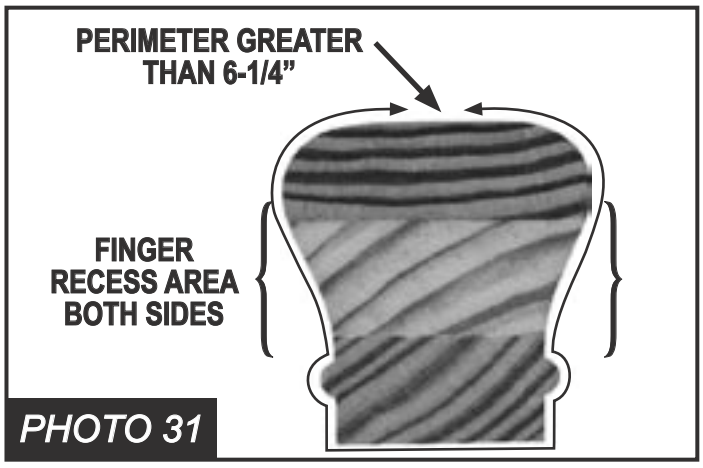

PHOTO 31

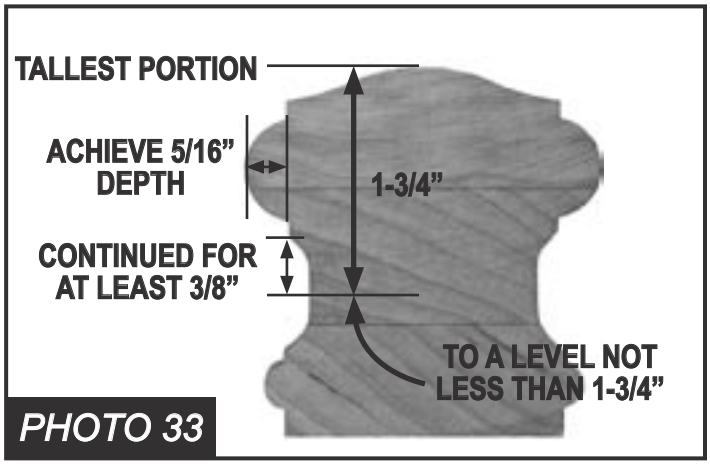

PHOTO 33

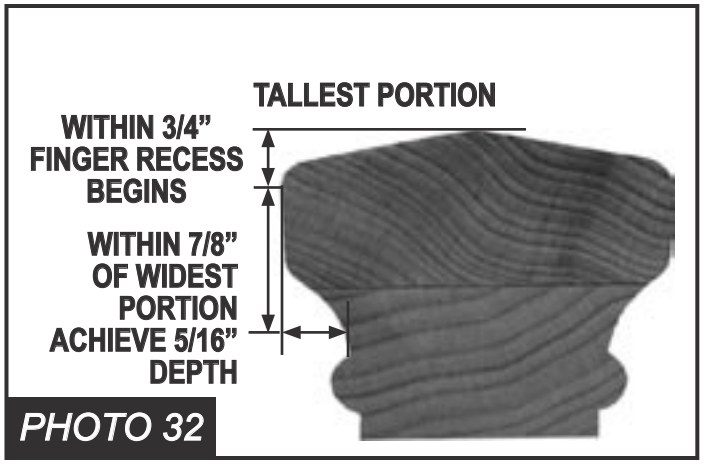

PHOTO 32

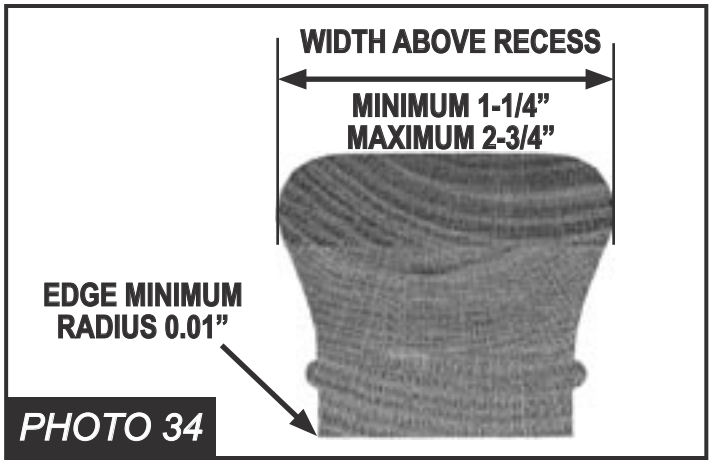

PHOTO 34

R311.5.7 Illumination.
All stairs shall be provided with illumination in accordance with Section R303.6.

R311.5.8 Special stairways.
Circular stairways, spiral stairways, winders and bulkhead enclosure stairways shall comply with all requirements of Section R311.5 except as specified below.

R311.5.8.1 Spiral Stairs.
Spiral stairways are permitted, provided the minimum width shall be 26 inches (660 mm) with each tread having a 7½ inch (190 mm) minimum tread depth at 12 inches from the narrower edge. All treads shall be identical, and the rise shall be no more than 9½ inches (241 mm). A minimum headroom of 6 feet, 6 inches (1982 mm) shall be provided. **PHOTO 35**.

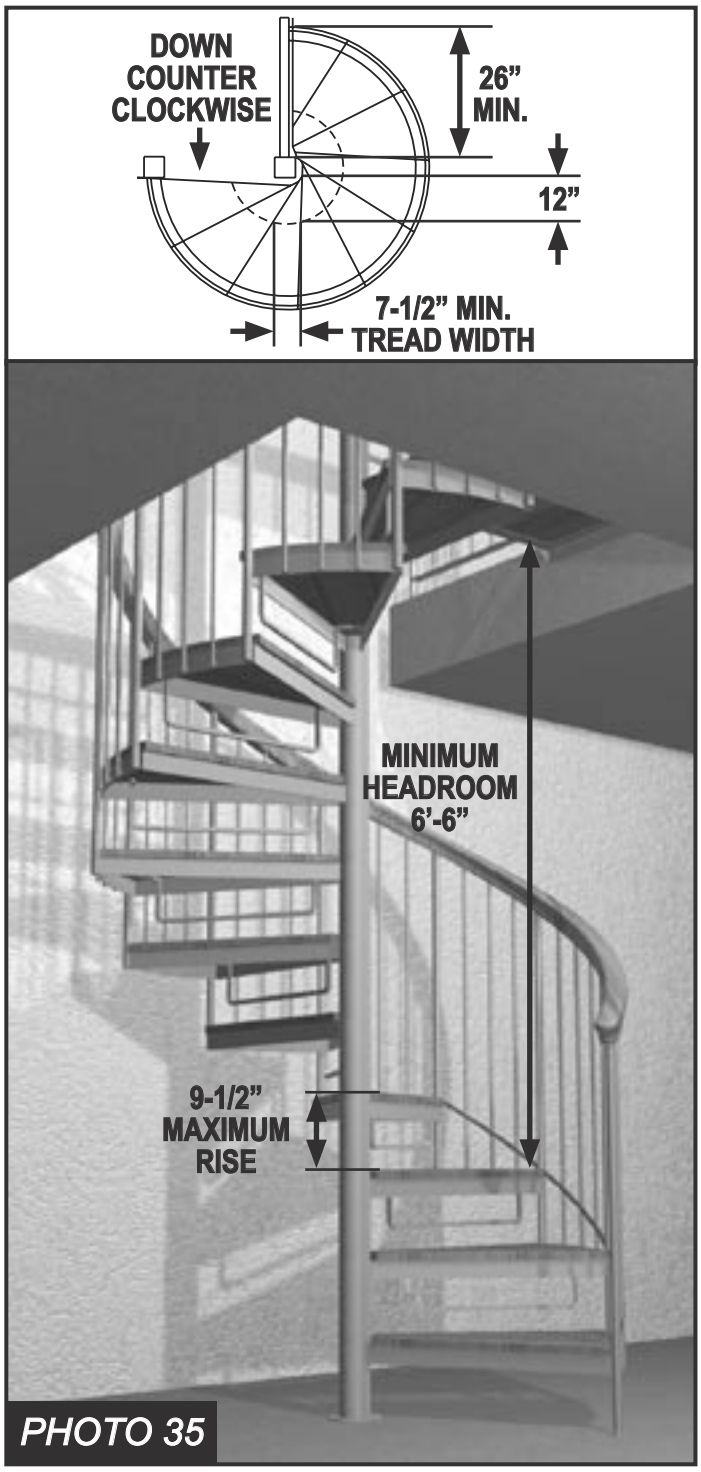

PHOTO 35

R311.5.8.2 Bulkhead enclosure stairways.
Stairways serving bulkhead enclosures, not part of the required building egress, providing access from the outside grade level to the basement shall be exempt from the requirements of Sections R311.4.3 and R311.5 where the maximum height from the basement finished floor level to grade adjacent to the stairway does not exceed 8 feet (2438 mm), and the grade level opening to the stairway is covered by a bulkhead enclosure with hinged doors or other approved means.

SECTION R312 GUARDS

R312.1 Guards.
Porches, balconies, ramps or raised floor surfaces located more than 30 inches (762 mm) above the floor or grade below shall have guards not less than 36 inches (914 mm) in height. Open sides of stairs with a total rise of more than 30 inches (762 mm) above the floor or grade below shall have guards not less than 34 inches (864 mm) in height measured vertically from the nosing of the treads. **PHOTO 36**.

Porches and decks which are enclosed with insect screening shall be equipped with guards where the walking surface is located more than 30 inches (762 mm) above the floor or grade below.

PHOTO 36

R312.2 Guard opening limitations.
Required guards on open sides of stairways, raised floor areas, balconies and porches shall have intermediate rails or ornamental closures which do not allow passage of a sphere 4 inches (102 mm) or more in diameter. **PHOTO 37**.

Exception: 1. The triangular openings formed by the riser, tread and bottom rail of a guard at the open side of a stairway are permitted to be of such a size that a sphere 6 inches (152 mm) cannot pass through. **PHOTO 38**.
2. Openings for required guards on the sides of stair treads shall not allow a sphere 4⅜ inches (107 mm) to pass through. **PHOTO 38**.

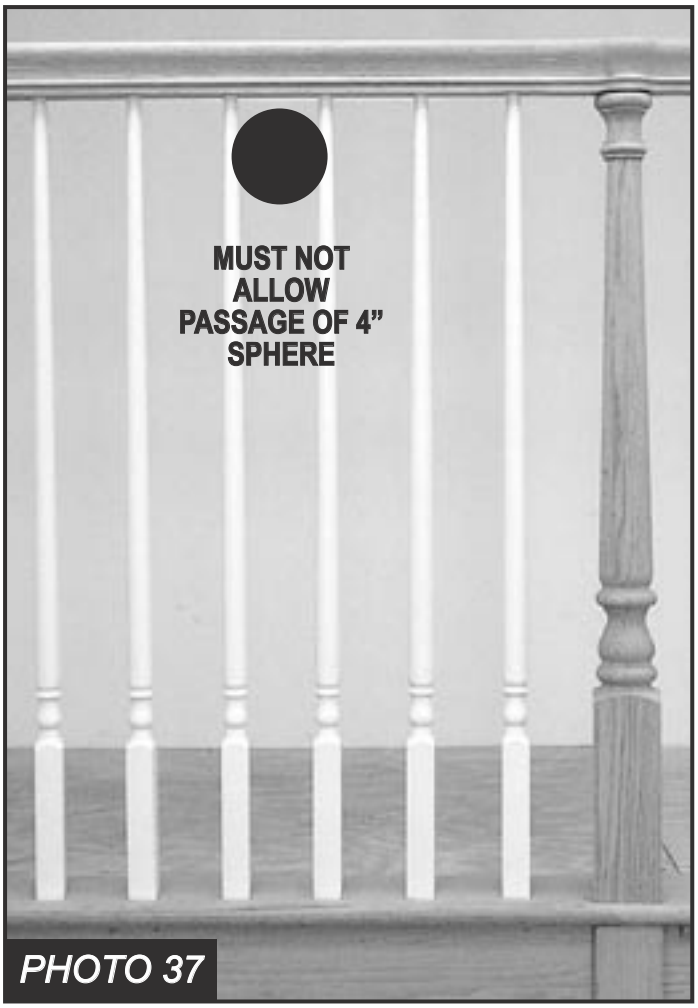

PHOTO 37

PHOTO 38

CHAPTER 2

DEFINITIONS

R201.3 Terms Defined in other codes. Where terms are not defined in this code such terms shall have meanings ascribed to them as in other code publications of the International Code Council.

Note: In order to assure a complete understanding in accordance with above we have listed all the stair related definitions from both the IRC and the IBC (International Building Code).

IRC
Section R202 Definitions

GUARD. A building component or a system of building components located near the open sides of elevated walking surfaces that minimizes the possibility of a fall from the walking surface to a lower level.

HANDRAIL. A horizontal or sloping rail intended for grasping by the hand for guidance or support.

WINDER. A tread with nonparallel edges.

IBC
Section 1002 Definitions

ALTERNATING TREAD DEVICE. A device that has a series of steps between 50 and 70 degrees (0.87 and 1.22 rad) from horizontal, usually attached to a center support rail in an alternating manner so that the user does not have both feet on the same level at the same time.

GUARD. A building component or a system of building components located at or near the open sides of elevated walking surfaces that minimizes the possibility of a fall from the walking surface to a lower level.

HANDRAIL. A horizontal or sloping rail intended for grasping by the hand for guidance or support.

NOSING. The leading edge of treads of stairs and of landings at the top of stairway flights.

SCISSOR STAIR. Two interlocking stairways providing two separate paths of egress located within one stairwell enclosure.

STAIR. A change in elevation, consisting of one or more risers.

STAIRWAY. One or more flights of stairs, either exterior or interior, with the necessary landings and platforms connecting them, to form a continuous and uninterrupted passage from one level to another.

STAIRWAY, EXTERIOR. A stairway that is open on at least one side, except for required structural columns, beams, handrails and guards. The adjoining open areas shall be either yards, courts or public ways. The other sides of the exterior stairway need not be open.

STAIRWAY, INTERIOR. A stairway not meeting the definition of an exterior stairway.

STAIRWAY, SPIRAL. A stairway having a closed circular form in its plan view with uniform section-shaped treads attached to and radiating from a minimum-diameter supporting column.

WINDER. A tread with nonparallel edges.

FULL SCALE TYPE II RAIL TEST

Instructions:
Position rail section with widest point of grip at line AB and left edge touching line AC. Keeping horizontal axis of rail parallel to line AB.

With the rail in position, it must pass tests 1) thru 5) to meet the **R315.2 Type II Handrail Grip Size requirements.**
If profile is asymmetrical both sides must pass.

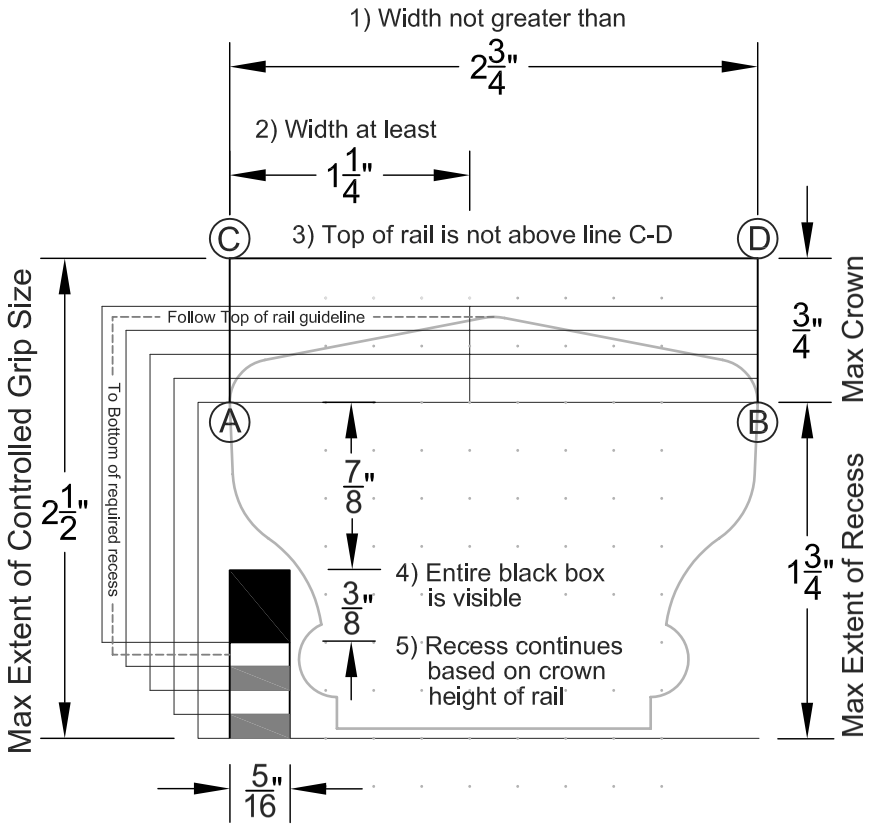

Reproduction check: solid line measures 2.75 in.

Stairway Manufacturers' Association • www.stairways.org

cut on line and laminate for handy field/desk reference tool

NOTES:

STAIRWAY MANUFACTURERS' ASSOCIATION SMA

THE MISSION OF THE SMA IS:

• To organize the varied elements of the stair industry into a leader in the code change process by actively participating at all levels.
• To write standards that insure design and installation criteria meet or exceed the minimum standard set forth by the existing code.
• To participate in design and product testing as to learn more about stair dynamics so that safety and aesthetics can coexist while incidences of stair accidents are reduced.
• To establish a central source that will disseminate to the membership current and proposed code information impacting all facets of stair building and millwork usage.
• To protect the rights and interests of both the consumer and the stair industry.

The Stairway Manufacturers' Association is dedicated to the prospect that safety and aesthetics, with respect to stairs, are not mutually exclusive....

The SMA is a broad based industry association founded in 1988. Our members include stair parts manufacturers, stair builders, installers, millwork distributors, dealers and interested building products professionals. We are an industry organization run by industry people. Our primary focus is to represent the millwork industry to the building development groups at the local, country, state and national levels. Because the SMA represents the people who build, install and sell stair parts and stairways in this country, it is our purpose to defend, test, evaluate and promote products and standards that insure safety in conjunction with growth and prosperity of our industry.

For more information about the association or becoming a member either write, call or visit our website.

The Stairway Manufacturers' Association
175 State Road East
Westminster, MA 01473
Toll Free: 877-500-5759
Website: www.stairways.org
Email: SMA@stairways.org

IN SUPPORT OF THE STAIR INDUSTRY!